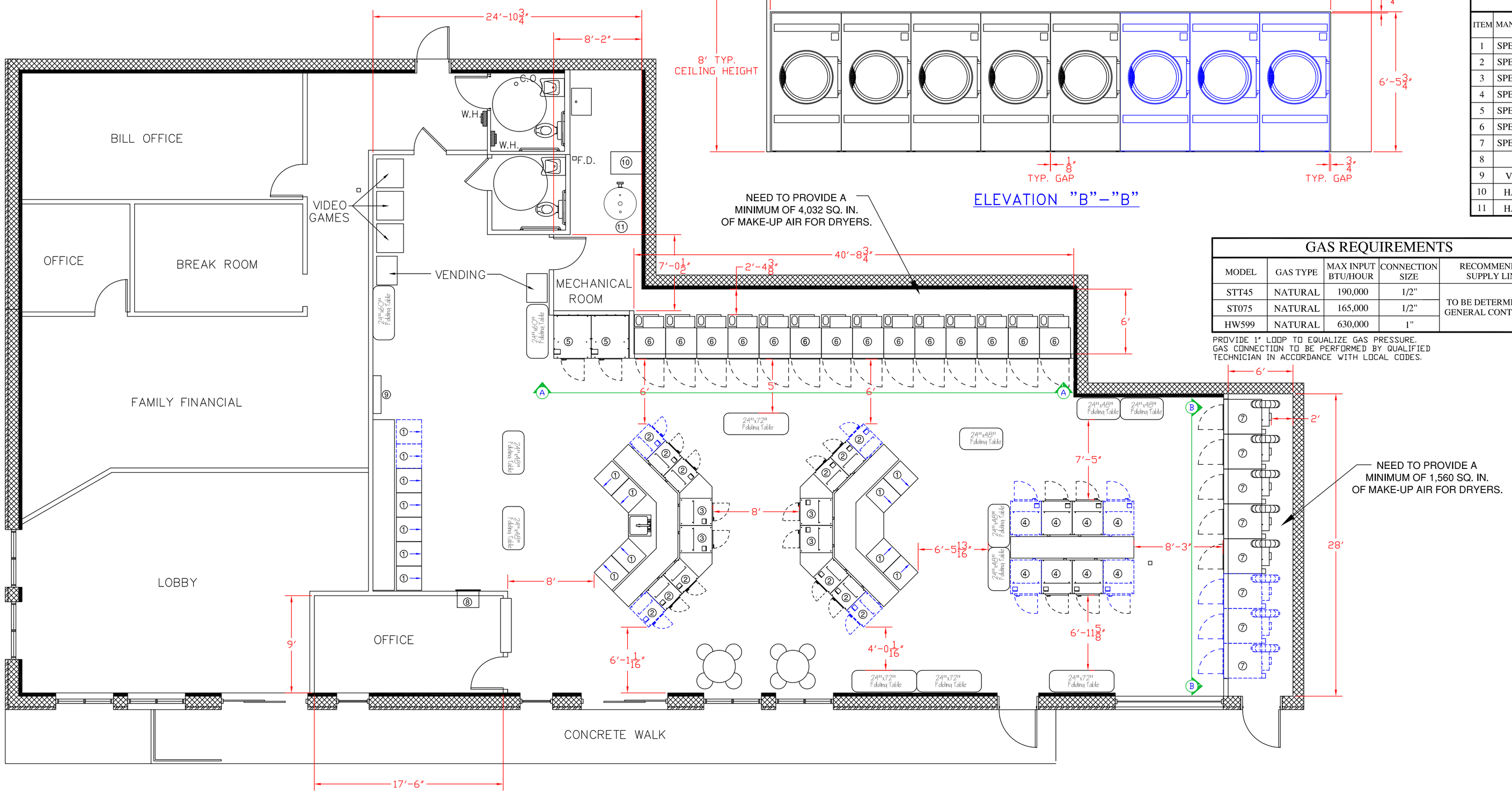

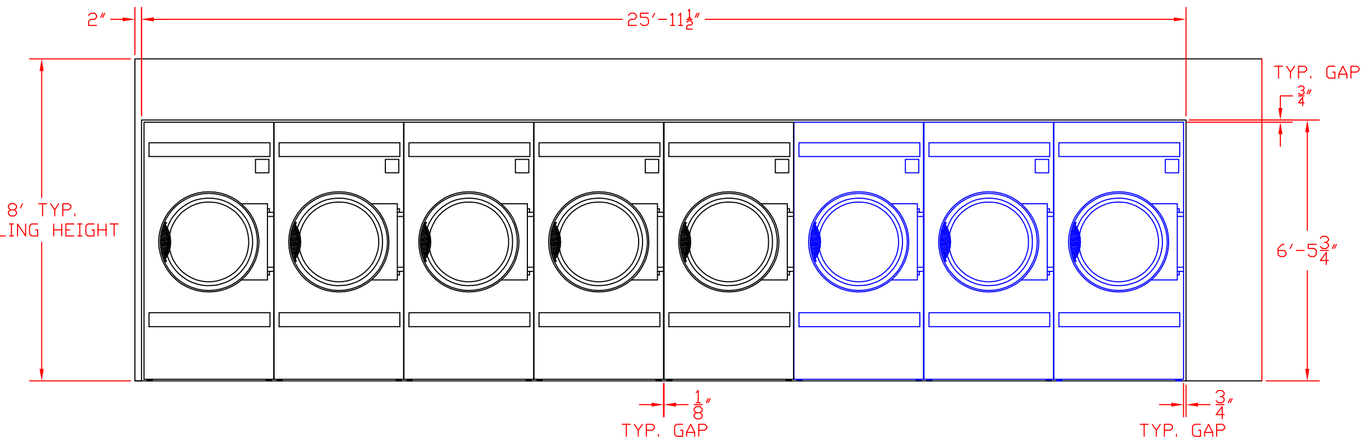

ELEVATION "B"–"B"

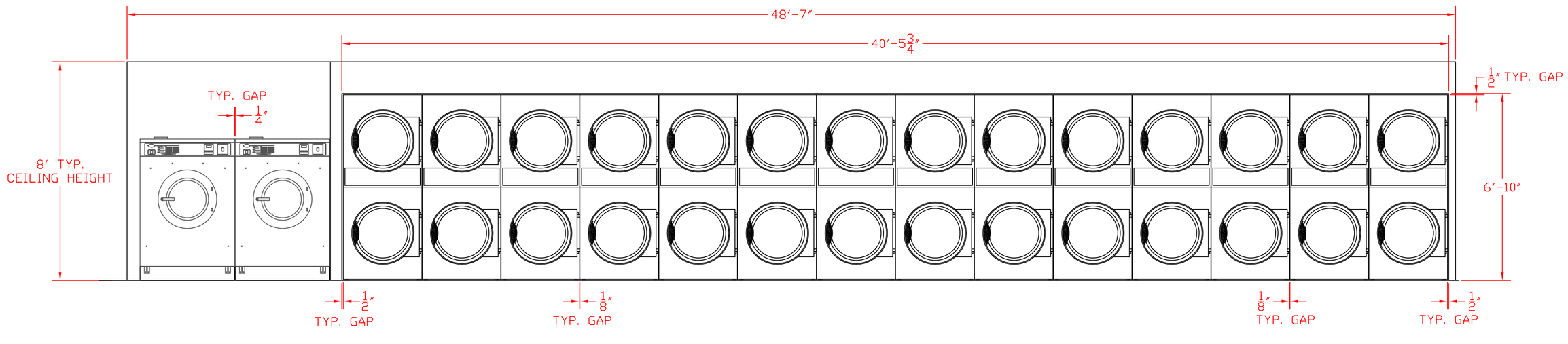

ELEVATION "A"–"A"

EQUIPMENT LIST

ITEM	MANUFACTURER	MODEL	DESCRIPTION	EXIST	PRPD.	FUT.
1	SPEED QUEEN	SWFB61	18 LB. WASHER/EXTRACTOR		14	2
2	SPEED QUEEN	SC25	25 LB. WASHER/EXTRACTOR		8	4
3	SPEED QUEEN	SC40	40 LB. WASHER/EXTRACTOR		4	
4	SPEED QUEEN	SC60	60 LB. WASHER/EXTRACTOR		4	4
5	SPEED QUEEN	SC80	80 LB. WASHER/EXTRACTOR		2	
6	SPEED QUEEN	STT45	45 LB. STACK TUMBLER		14	
7	SPEED QUEEN	ST075	75 LB. TUMBLER		5	3
8	ROWE	BC2800	BILL CHANGER		1	
9	VENDRITE	894	8 COLUMN SOAP VENDER		1	
10	HAMILTON	HW599	HOT WATER HEATER		1	
11	HAMILTON	HET275	HOT WATER TANK		1	

GAS REQUIREMENTS

MODEL	GAS TYPE	MAX INPUT BTU/HOUR	CONNECTION SIZE	RECOMMENDED SUPPLY LINE
STT45	NATURAL	190,000	1/2"	TO BE DETERMINED BY GENERAL CONTRACTOR
ST075	NATURAL	165,000	1/2"	
HW599	NATURAL	630,000	1"	

PROVIDE 1" LOOP TO EQUALIZE GAS PRESSURE.
GAS CONNECTION TO BE PERFORMED BY QUALIFIED TECHNICIAN IN ACCORDANCE WITH LOCAL CODES.

ELECTRICAL REQUIREMENTS

MODEL	VOLTAGE	HZ	PH	CIRCUIT BREAKER	WIRE SIZE
SWFB61	120	60	1	15 AMP	N.E.C.
SC25	208-240	60	3	15 AMP	N.E.C.
SC40	208-240	60	3	20 AMP	N.E.C.
SC60	208-240	60	3	20 AMP	N.E.C.
SC80	208-240	60	3	20 AMP	N.E.C.
STT45	208-240	60	1	15 AMP	N.E.C.
ST075	120	60	1	20 AMP	N.E.C.
CARD	120	60	1	15 AMP	N.E.C.
HW599	208-240	60	1	*3 AMPS	N.E.C.

CONSULT ELECTRICAL CODE FOR LOCAL REUIREMENTS.
USE ONLY 3 POLE CIRCUIT BREAKERS FOR 3PH SERVICE.
MANUFACTURERS RECOMMEND PROVIDING 1 CIRCUIT BREAKER FOR EACH MACHINE.
*MAXIMUM AMPERAGE DRAW AT 230 VOLTS AND ONE PHASE IS LESS THAN 3 AMPS.

WATER REQUIREMENTS

MODEL	COLD CONN. SIZE	HOT CONN. SIZE	RECOMMENDED LINE SIZE TO SUPPLY ALL MACHINES COLD / HOT
SWFB61	3/4"	3/4"	TO BE DETERMINED BY GENERAL CONTRACTOR
SC25	3/4"	3/4"	
SC40	3/4"	3/4"	
SC60	3/4"	3/4"	
SC80	3/4"	3/4"	
HW599	1-1/2"	-	

EXHAUST / FRESH AIR MAKE-UP REQ.

MODEL	EXHAUST SIZE	AIR FLOW	FRESH AIR MAKE-UP REQUIREMENTS
STT45	10"	1,200 CFM ea.	Total Dryers 4,032 SQ. IN.
ST075	8"	900 CFM ea.	Total Dryers 1,560 SQ. IN.
HW599	5"	-	DIRECT VENT

WHEN JOINING EXHAUST VENTS TO PLENUMS, USE 45° ANGLES.
DUCTWORK SIZE WILL VARY WITH INSTALLATION CONDITIONS.
EXHAUST STATIC PRESSURE SHOULD NOT EXCEED 0.3 INCHES (0.74mcl.) WATER COLUMN.

NOTE:
1. ELEVATIONS ARE NOT TO SCALE.

DRAWING APPROVED
BY:
DATE:

PAC Industries, Incorporated
5341 Jaycee Ave. Harrisburg, Pa 17112
Phone: (717) 657-0407 (800) 692-6214 Fax:(717) 657-8678

COIN LAUNDRY LAYOUT

REV. 2			DRAWING # LA206029
DRAWING 1 OF 1	SCALE: 3/16" = 1'	DATE:	NAME: SMITH

This drawing is the sole property of PAC Industries and has been created based on preliminary information supplied by others. The information contained in this document is tenative and not meant for construction purposes. The use of this document is strictly prohibited without the express knowledge and consent of PAC Industries and must be returned on demand. This includes, but not limited to copying, submission to other distributors, or any action that may prove detrimental to PAC Industries.